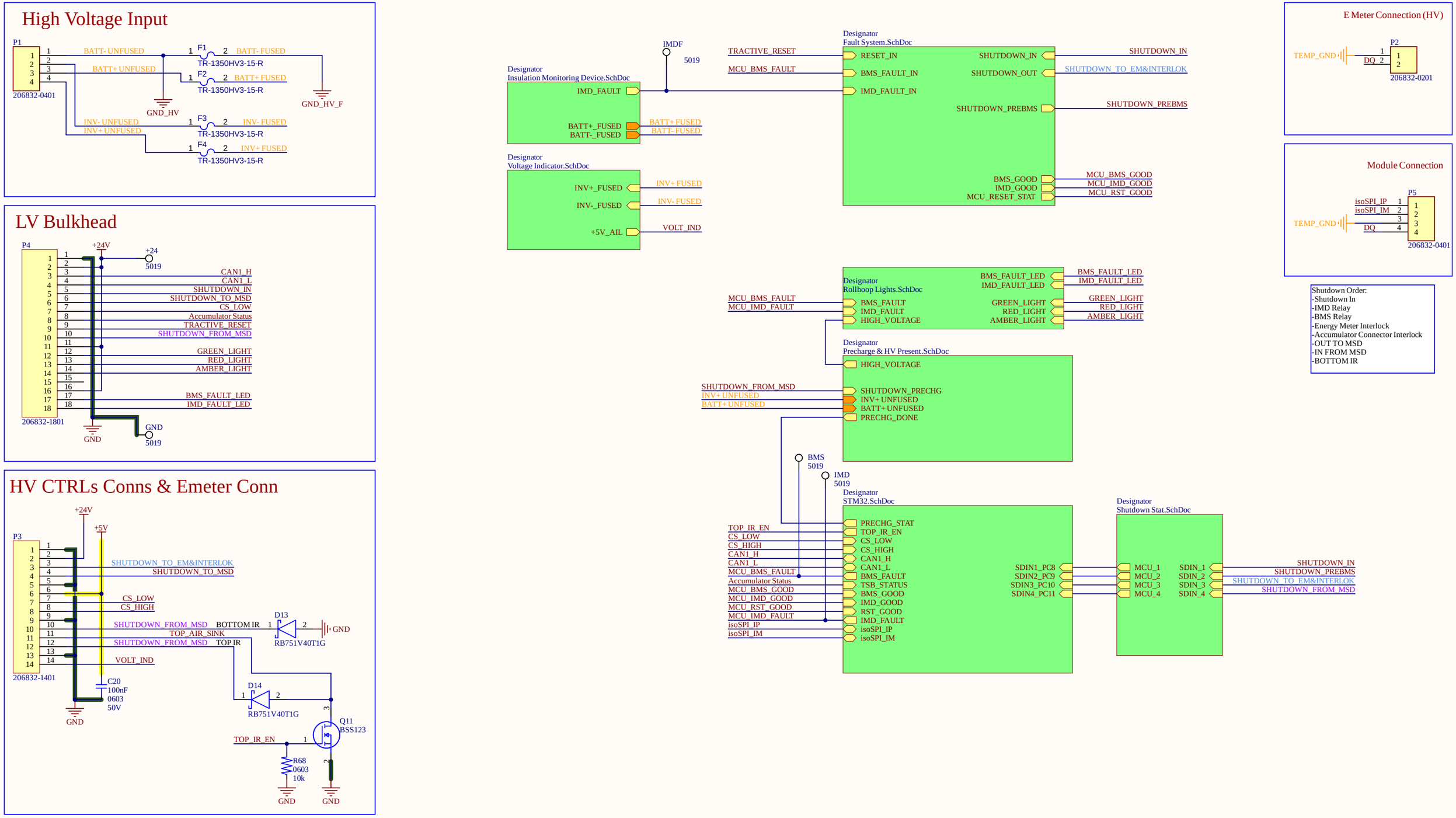

THE UNIVERSITY OF AKRON

SHEET SIZE	TITLE	PART NUMBER	REVISION
ANSI B	STM32F405 MCU Template	EL#####	AA
	LAST UPDATE 1/22/2026 12:36:49 AM	SHEET 1 of 9	

+5V Regulation (8V - 28V) @ 1A

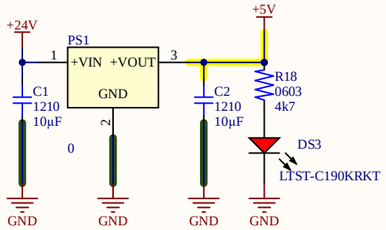

+3V3 Regulation

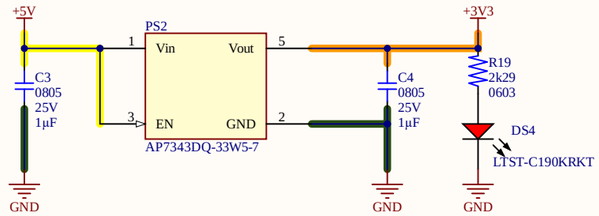

Isolated +5HV Supply

TODO: add RPP incase power supply is messed up.

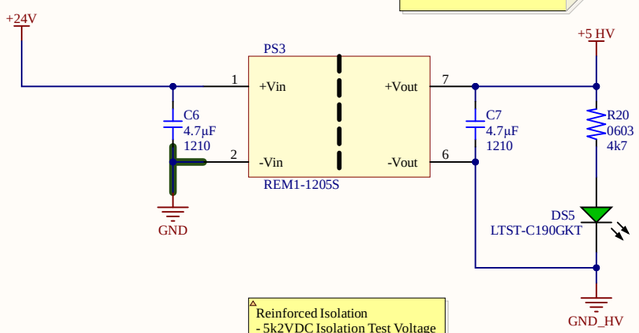

Reinforced Isolation
- 5k2VDC Isolation Test Voltage
- 250VAC Working Voltage

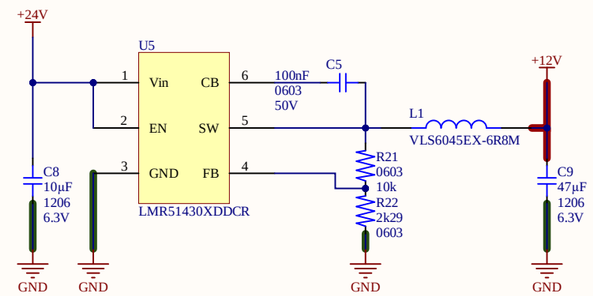

THE UNIVERSITY OF AKRON

SHEET SIZE	TITLE	PART NUMBER	REVISION
ANSI B	STM32F405 MCU Template	EL#####	AA
	LAST UPDATE 1/22/2026 12:36:50 AM	SHEET 2 of 9	

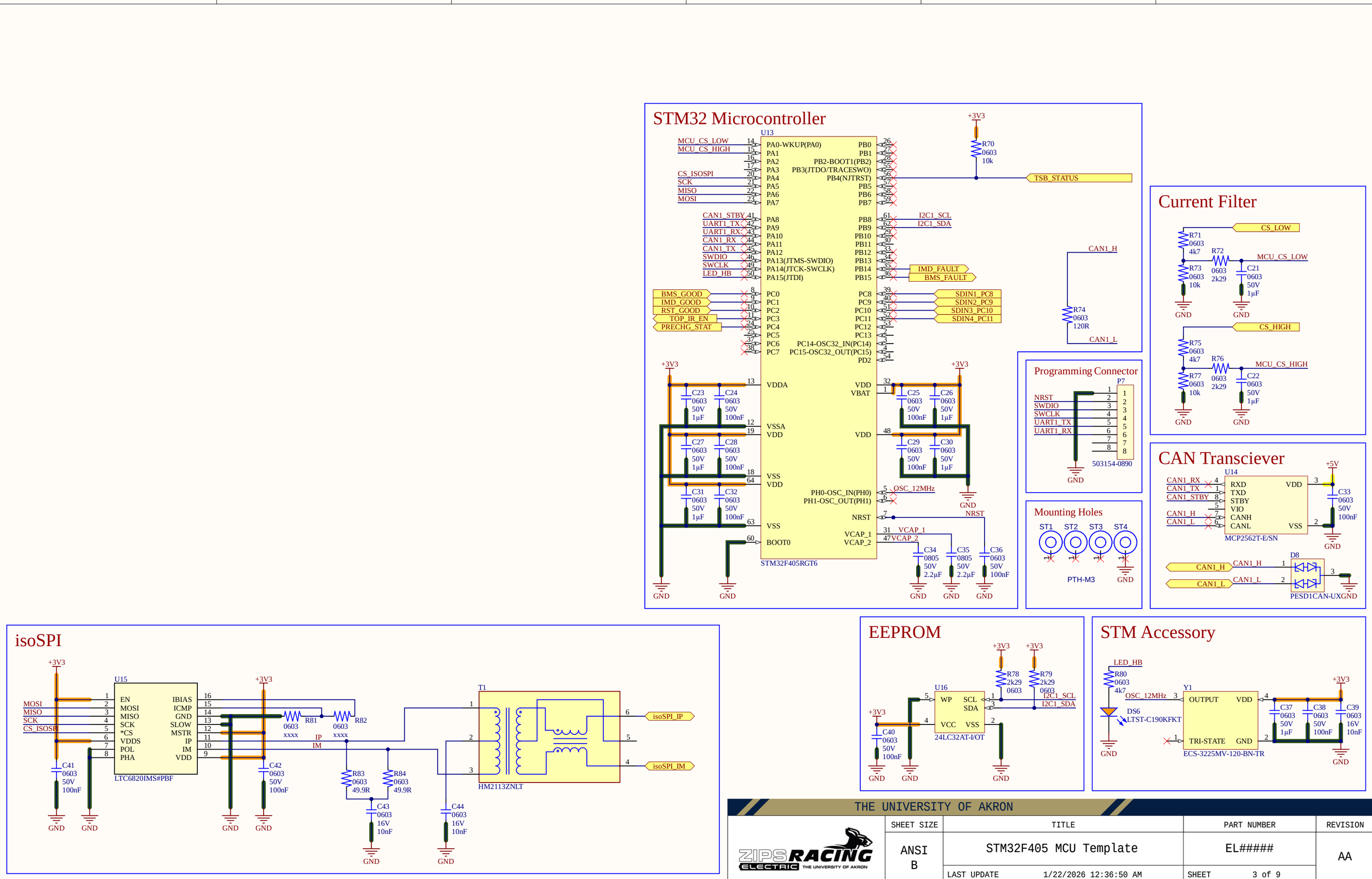
STM32 Microcontroller
U13
STM32F405RGT6
MCU_CS_LOW
MCU_CS_HIGH
CS_ISOSPI
SCK
MISO
MOSI
CAN1_STBY
UART1_TX
UART1_RX
CAN1_RX
CAN1_TX
SWDIO
SWCLK
LED_HB
BMS_GOOD
IMD_GOOD
RST_GOOD
TOP_IR_EN
PRECHG_STAT
PA0-WKUP(PA0)
PA1
PA2
PA3
PA4
PA5
PA6
PA7
PA8
PA9
PA10
PA11
PA12
PA13(JTMS-SWDIO)
PA14(JTCK-SWCLK)
PA15(JTDI)
PC0
PC1
PC2
PC3
PC4
PC5
PC6
PC7
VDDA
VSSA
VDD
VSS
BOOT0
PB0
PB1
PB2-BOOT1(PB2)
PB3(JTDO/TRACESWO)
PB4(NJTRST)
PB5
PB6
PB7
PB8
PB9
PB10
PB11
PB12
PB13
PB14
PB15
PC8
PC9
PC10
PC11
PC12
PC13
PC14-OSC32_IN(PC14)
PC15-OSC32_OUT(PC15)
PD2
VBAT
PH0-OSC_IN(PH0)
PH1-OSC_OUT(PH1)
NRST
VCAP_1
VCAP_2
+3V3
R70
0603
10k
TSB_STATUS
I2C1_SCL
I2C1_SDA
IMD_FAULT
BMS_FAULT
SDIN1_PC8
SDIN2_PC9
SDIN3_PC10
SDIN4_PC11
OSC_12MHz
C23
C24
C25
C26
C27
C28
C29
C30
C31
C32
C33
C34
C35
C36
0603
50V
1µF
100nF
0805
2.2µF
GND
CAN1_H
CAN1_L
R74
0603
120R
Current Filter
CS_LOW
CS_HIGH
R71
R72
R73
R75
R76
R77
4k7
2k29
10k
C21
C22
MCU_CS_LOW
MCU_CS_HIGH
Programming Connector
P7
503154-0890
Mounting Holes
ST1
ST2
ST3
ST4
PTH-M3
CAN Transciever
U14
MCP2562T-E/SN
RXD
TXD
STBY
VIO
CANH
CANL
VDD
VSS
+5V
D8
PESD1CAN-UX
isoSPI
U15
LTC6820IMS#PBF
EN
MOSI
MISO
SCK
*CS
VDDS
POL
PHA
IBIAS
ICMP
GND
SLOW
MSTR
IP
IM
VDD
R81
R82
0603
xxxx
IP
IM
R83
R84
49.9R
C41
C42
C43
C44
16V
10nF
T1
HM2113ZNLT
isoSPI_IP
isoSPI_IM
EEPROM
U16
24LC32AT-I/OT
WP
SCL
SDA
VCC
VSS
R78
R79
2k29
C40
100nF
STM Accessory
LED_HB
R80
4k7
OSC_12MHz
DS6
LTST-C190KFKT
Y1
ECS-3225MV-120-BN-TR
OUTPUT
TRI-STATE
C37
C38
C39
1µF
THE UNIVERSITY OF AKRON
ZIPS RACING ELECTRIC
SHEET SIZE
ANSI B
TITLE
STM32F405 MCU Template
PART NUMBER
EL#####
REVISION
AA
LAST UPDATE
1/22/2026 12:36:50 AM
SHEET
3 of 9

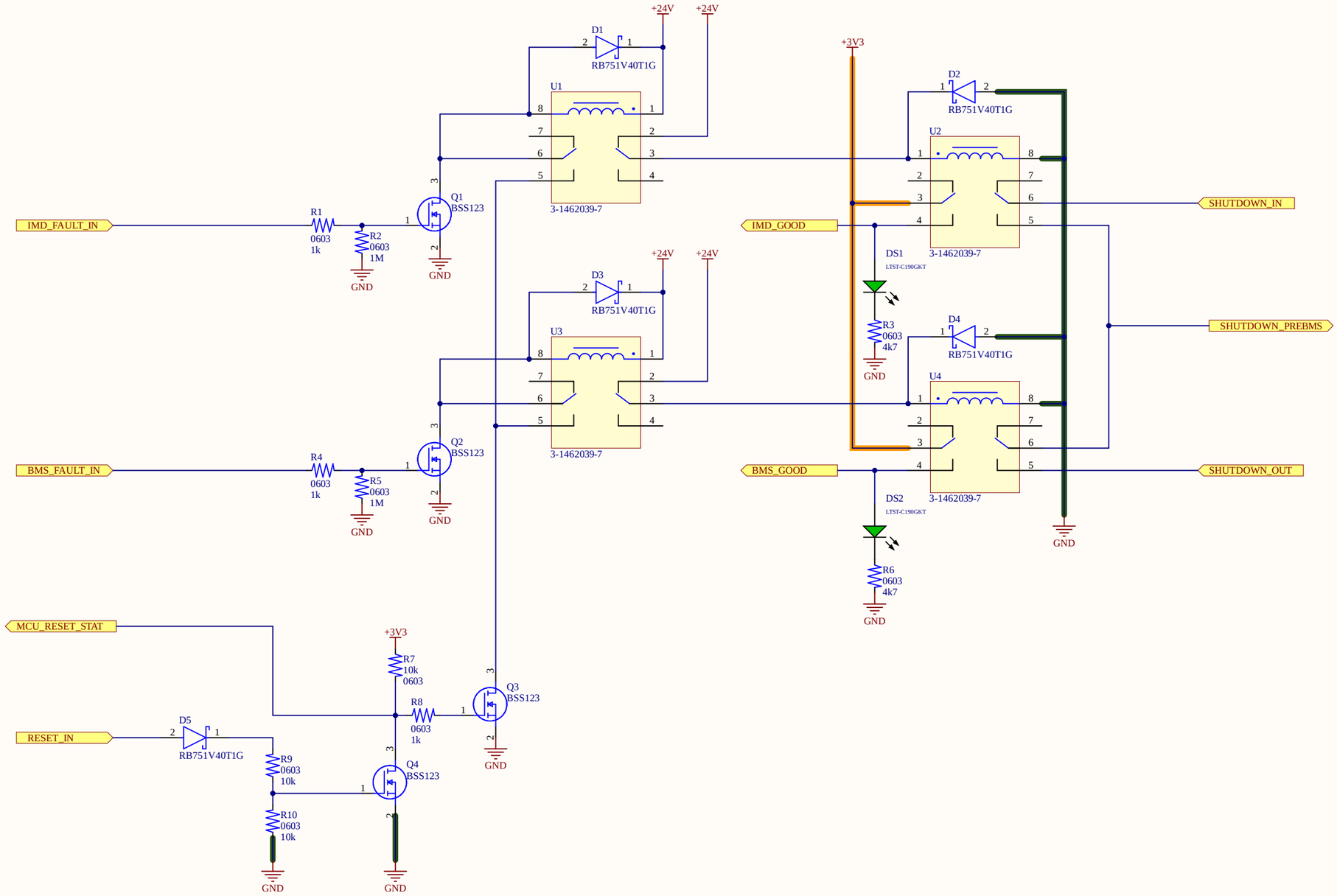

THE UNIVERSITY OF AKRON

SHEET SIZE	TITLE	PART NUMBER	REVISION
ANSI B	STM32F405 MCU Template	EL#####	AA
	LAST UPDATE 1/22/2026 12:36:50 AM	SHEET 4 of 9	

EV.5.11.5 The Tractive System Status Indicator must show when the GLV System is energized:

	Condition	Green Light	Red Light
a.	No Faults	Always ON	OFF
b.	Fault in one or the two: BMS **EV.7.3.5** or IMD **EV.7.6.5**	OFF	Flash 2 Hz to 5 Hz, 50% duty cycle

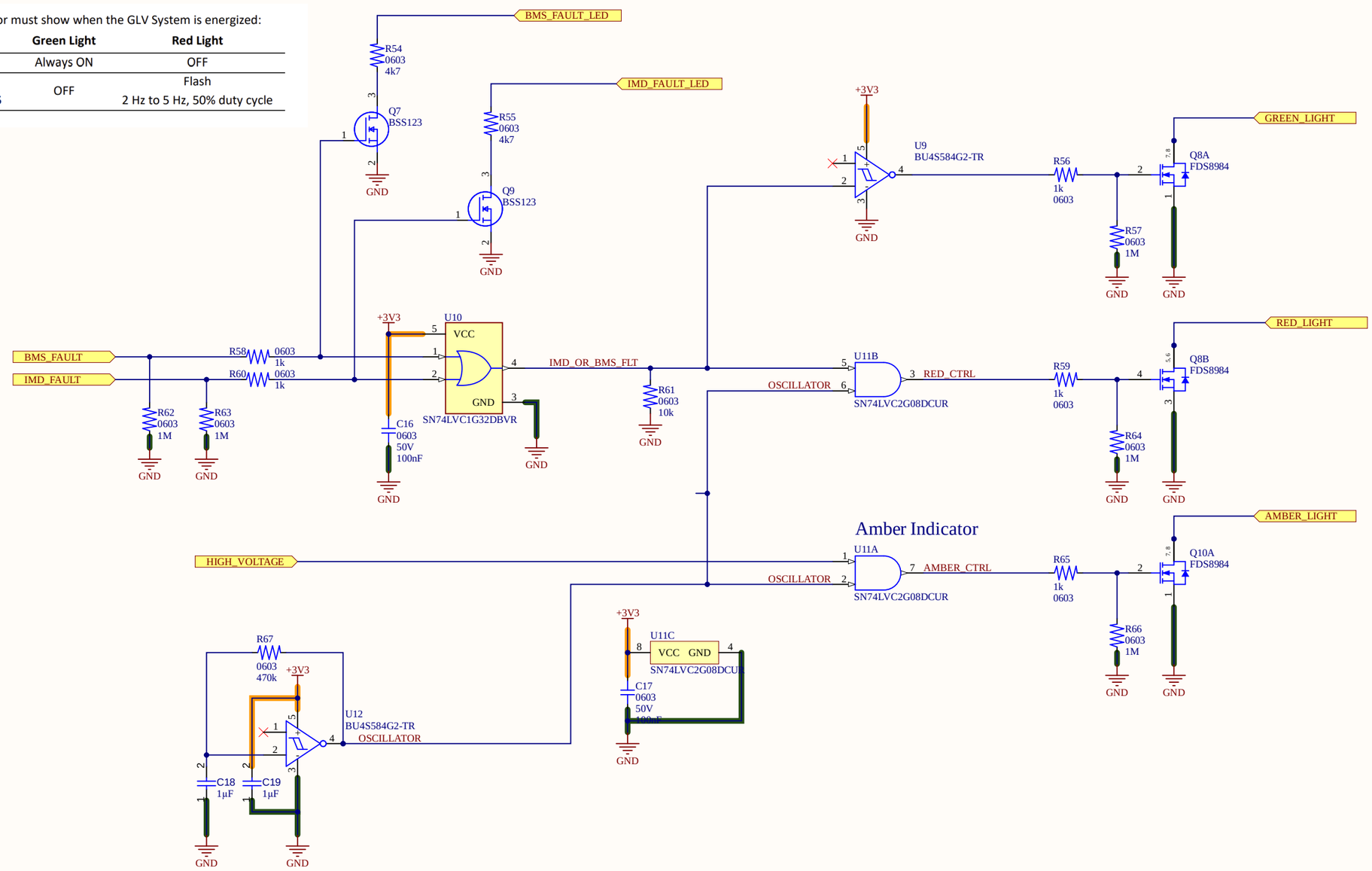

THE UNIVERSITY OF AKRON

SHEET SIZE	TITLE	PART NUMBER	REVISION
ANSI B	STM32F405 MCU Template	EL#####	AA
	LAST UPDATE 1/22/2026 12:36:50 AM	SHEET 5 of 9	

Precharge - TS

This circuit checks for the voltage difference across the positive AIR, after precharge has been enabled. It will then power the coil of a relay powers the positive AIR coil, closing it.

BATT+ UNFUSED

K1
KT24-1A-40L-SMD

SHUTDOWN_PRECHG

D6
RB751V40T1G

BATT+ needs to be galvanically disconnected from the comparator circuit if we are not precharging. Otherwise we are bridging the AIR's galvanic isolation when we don't want to.

100W, 1000 VDC Switching Rated
7 kV DC Isolation Voltage Rating

GND

0805 resistors are rated to 1/8W and 150V working voltage

R23 0805 68k1
R24 0805 100k
R25 0805 100k
R26 0805 100k
R27 0805 100k
R28 0805 100k
R29 0805 100k
R30 0805 100k
R31 0805 100k

INV+ UNFUSED

INV+ UNFUSED

R32 0805 100k
R33 0805 100k
R34 0805 100k
R35 0805 100k
R36 0805 100k
R37 0805 100k
R38 0805 100k
R39 0805 100k

+5 HV

C10 0603 50V 100nF
GND_HV

+5 HV

R40 0603 10k

+5 HV

C11 0603 50V 100nF
GND_HV

+5V

C12 0603 50V 100nF
GND

U6
ADUM225N1BRIZ

Vdd1 | Vdd2
Via | Voa → PRECHG_DONE
Vib | Vob → HIGH_VOLTAGE
GND1 | GND2

GND_HV | GND

Voltage Divider Falstad Sim

Voltage Divider:
10k/(10k+250k+499k) = 10/759

10k/(10k+100k+250K+470k) = 10/830

(10/815k)/(10/747) = 0.9145

Precharge Percent = 91.66%

TODO: Add 100k trim pot to BATT+ resistor chain, with target precharge percent set at 50k trim pot value. Allows fine tuning to account for resistor value error.

INV+_INPUT1
5019

PCHRG_REF1
5019

GND_HV is INVERTER-

C13 0603 50V 1µF
GND_HV

R41 0603 4.7k
GND_HV

R42 0603 4.7k
GND_HV

C14 0603 50V 1µF
GND_HV

U7
LMC7221BIM5X

GND_HV

R43 470k 0603

470k resistor allows hysterisis between turn-on and turn-off.

Hysterisis Simulation

5 kV Voltage Isolation reinforced
558V working working voltage
5V signal level translation
see datasheet for clearance requirments
(+-) 10 mA per channel
default output is high if +5HV is unpowered

Ready to Move Control

+5 HV

C15 0603 50V 100nF
GND_HV

+5 HV

R44 0603 10k

+5 HV

R45 2k29 0603

R46 2k29 0603
GND_HV

U8
LMC7221BIM5X

GND_HV

R49 470k 0603

Voltage Reference:
Max: 5V*(4.4k/(5.4k) = 0.96V
Min: 5V*(14.4k/(15.4k) = 0.33V

TSAL turn-on voltage:
60V*(747k / 757k) = 0.793V
30V*(10k/10k+499k+250k) = 0.396V

Refernce voltage is adjustable via trim pot. Formula H+E required 30V for TSAL to turn on, while FSAE requries 60V

100k resistor allows hysterisis between turn-on and turn-off.

Hysterisis Simulation

Precharge Enable Relay

INV+ UNFUSED

K2
KT24-1A-40L-SMD

SHUTDOWN_PRECHG

SHUTDOWN_PRECHG

D7
RB751V40T1G

R47 1k
R48 1k
R50 1k
R51 1k
R52 1k
R53 1k

BATT+ UNFUSED

Precharge Power Resistor

100W, 1000 VDC Switching Rated
7 kV DC Isolation Voltage Rating

GND

When this relay is activated by the shutdown loop, it starts the precharge process.

THE UNIVERSITY OF AKRON

ZIPS RACING ELECTRIC THE UNIVERSITY OF AKRON

SHEET SIZE	TITLE	PART NUMBER	REVISION
ANSI B	STM32F405 MCU Template	EL#####	AA
	LAST UPDATE 1/22/2026 12:36:50 AM	SHEET 6 of 9	

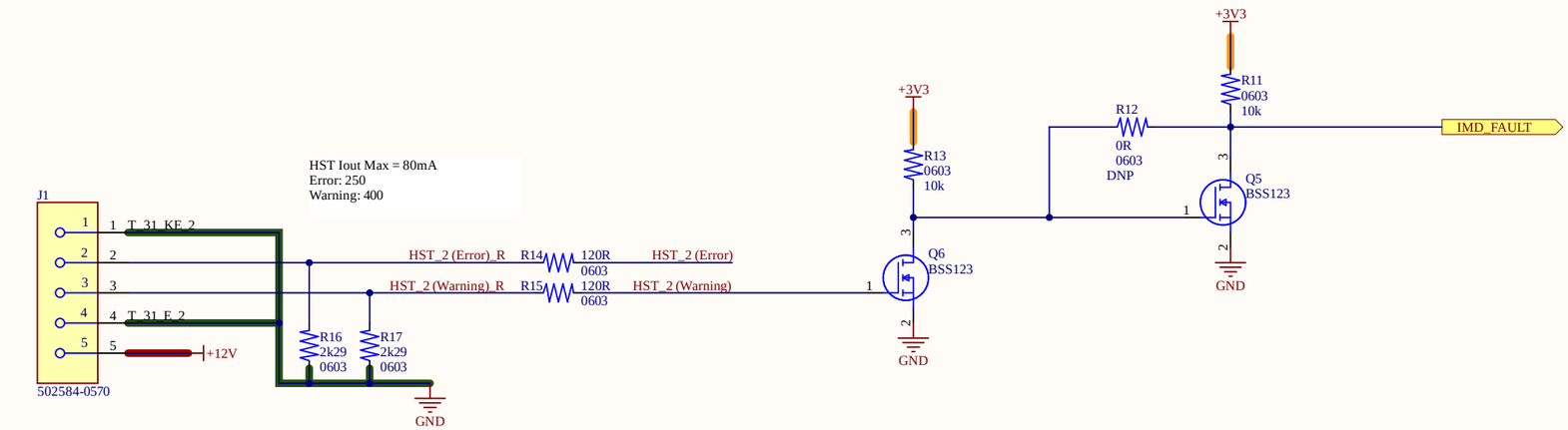

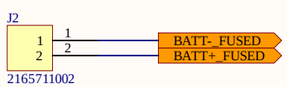

THE UNIVERSITY OF AKRON

SHEET SIZE	TITLE	PART NUMBER	REVISION
ANSI B	STM32F405 MCU Template	EL#####	AA
	LAST UPDATE 1/22/2026 12:36:50 AM	SHEET 7 of 9	

Voltage Indicator Light

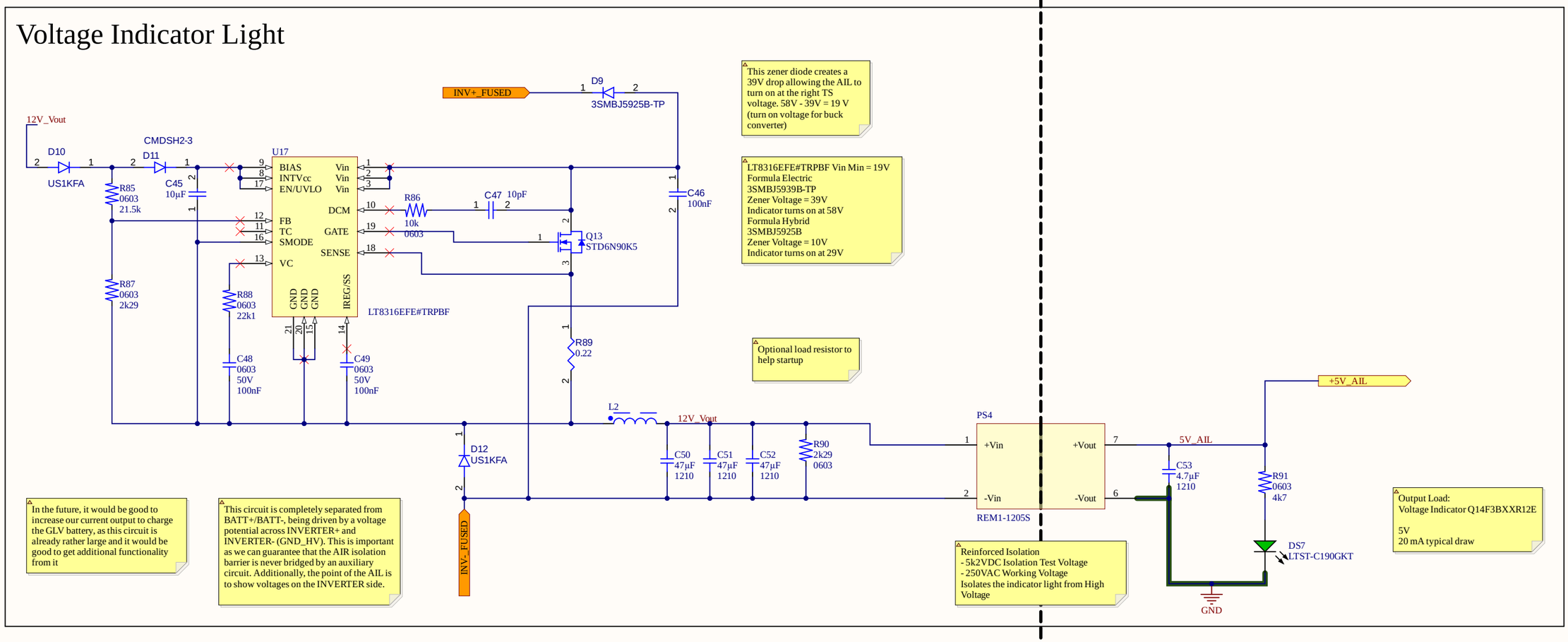

This zener diode creates a 39V drop allowing the AIL to turn on at the right TS voltage. 58V - 39V = 19 V (turn on voltage for buck converter)

LT8316EFE#TRPBF Vin Min = 19V
Formula Electric
3SMBJ5939B-TP
Zener Voltage = 39V
Indicator turns on at 58V
Formula Hybrid
3SMBJ5925B
Zener Voltage = 10V
Indicator turns on at 29V

Optional load resistor to help startup

In the future, it would be good to increase our current output to charge the GLV battery, as this circuit is already rather large and it would be good to get additional functionality from it

This circuit is completely separated from BATT+/BATT-, being driven by a voltage potential across INVERTER+ and INVERTER- (GND_HV). This is important as we can guarantee that the AIR isolation barrier is never bridged by an auxiliary circuit. Additionally, the point of the AIL is to show voltages on the INVERTER side.

Reinforced Isolation
- 5k2VDC Isolation Test Voltage
- 250VAC Working Voltage
Isolates the indicator light from High Voltage

Output Load:
Voltage Indicator Q14F3BXXR12E

5V
20 mA typical draw

THE UNIVERSITY OF AKRON

SHEET SIZE	TITLE	PART NUMBER	REVISION
ANSI B	STM32F405 MCU Template	EL#####	AA
	LAST UPDATE 1/22/2026 12:36:50 AM	SHEET 8 of 9	

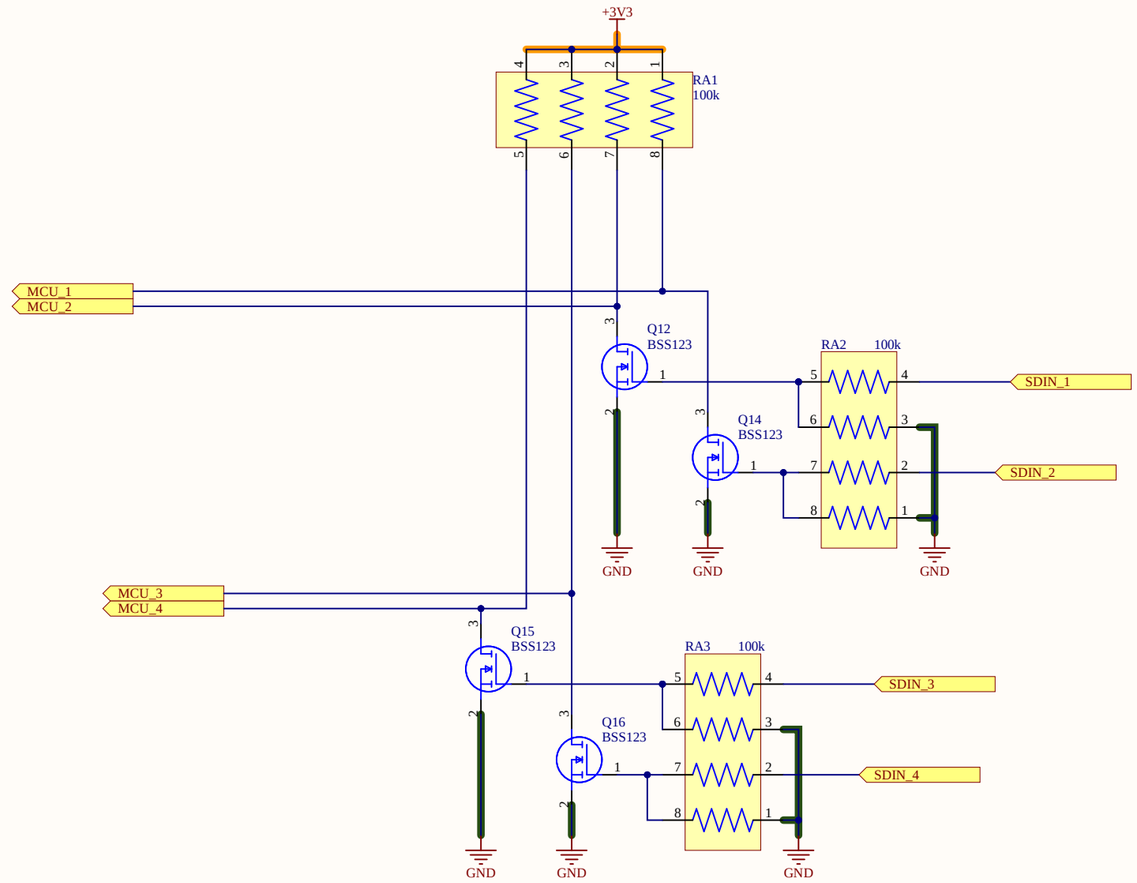

THE UNIVERSITY OF AKRON

SHEET SIZE	TITLE	PART NUMBER	REVISION
ANSI B	STM32F405 MCU Template	EL#####	AA
	LAST UPDATE 1/22/2026 12:36:50 AM	SHEET 9 of 9	